1. MiniArm Robotic Arm Introduction

1. Brief Introduction

Powered by Arduino UNO development board, MiniArm robotic arm uses Arduino for programming. Equipped with UNO 6-channal knob expansion board and Bluetooth module, it can control the robotic arm using knob or app quickly and easily. And using a 7.4v lithium battery allows the robotic arm to be used anywhere.

There are IO and I2C connectors reserved. You can develop more interesting and fun creative projects pairing with sensor expansion kits.

2. Packing List

(packing list)

3. Hardware Connection

Servo wiring shown as follows:

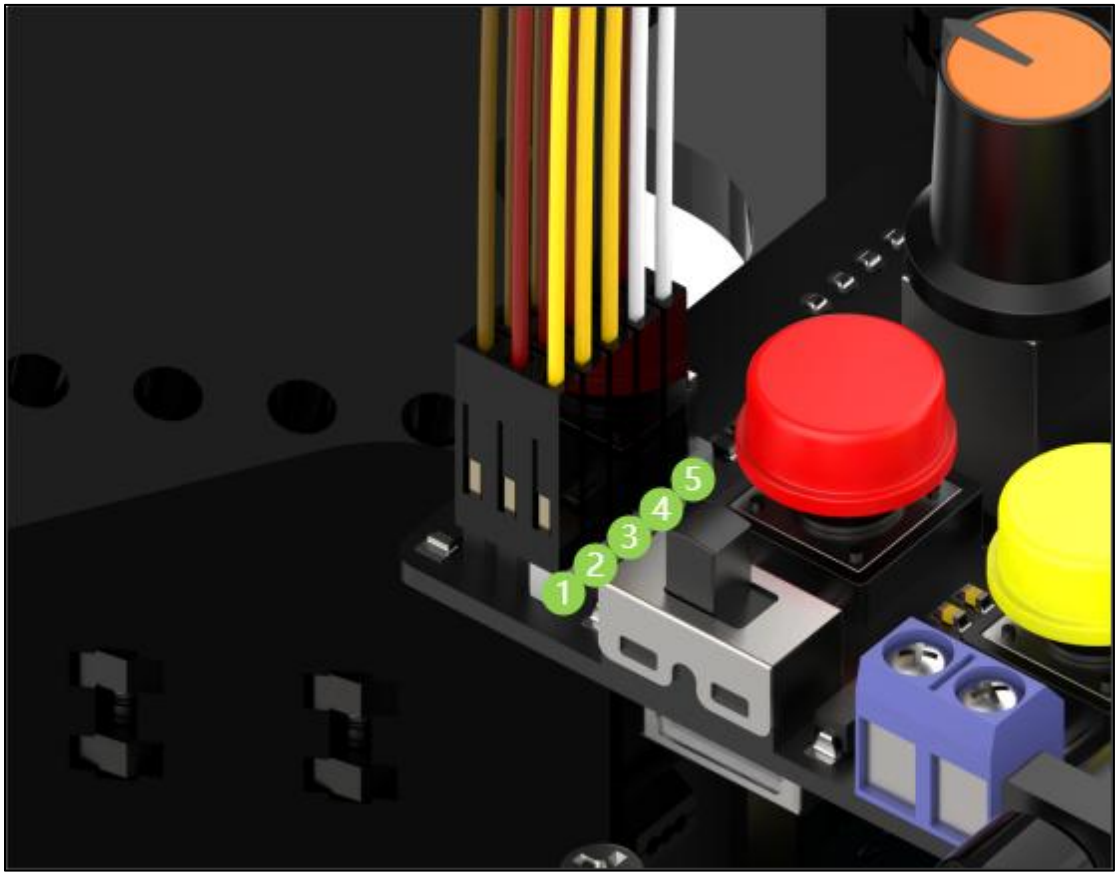

4. Hardware Instruction

4.1 Arduino UNO Control Board

The robotic arm uses the Arduino UNO control board as the main control. Conventional digital pins, analog pins, power pins and GND pins are extended from both sides to make it easier for wiring and debugging.

Note: when using the Arduino UNO control board with the UNO 6-channel knob control board, the power supply interface is the DC port on the UNO 6-channel knob control board.

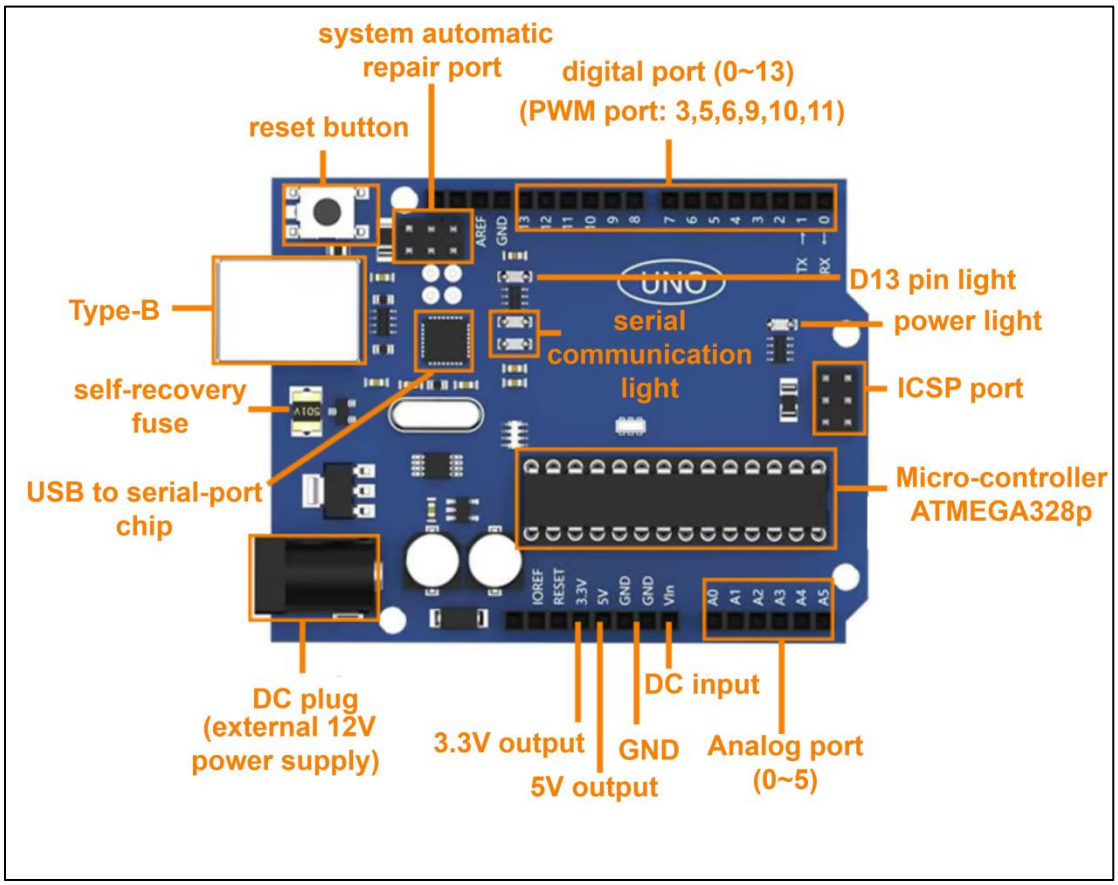

Parameters shown as follows:

Parameter	Specification
Microcontroller	ATMEGA328P
Working Voltage	5V
Input Voltage(recommended)	7~12V
EEPROM	1KB（ATmega328P）

4.2 UNO 6-Channel Knob Expansion Board

To facilitate operation and make the lineup more neat, the control of the

robotic arm is centralized in one expansion board using UNO 6-channel knob expansion board. Instruction as follow:

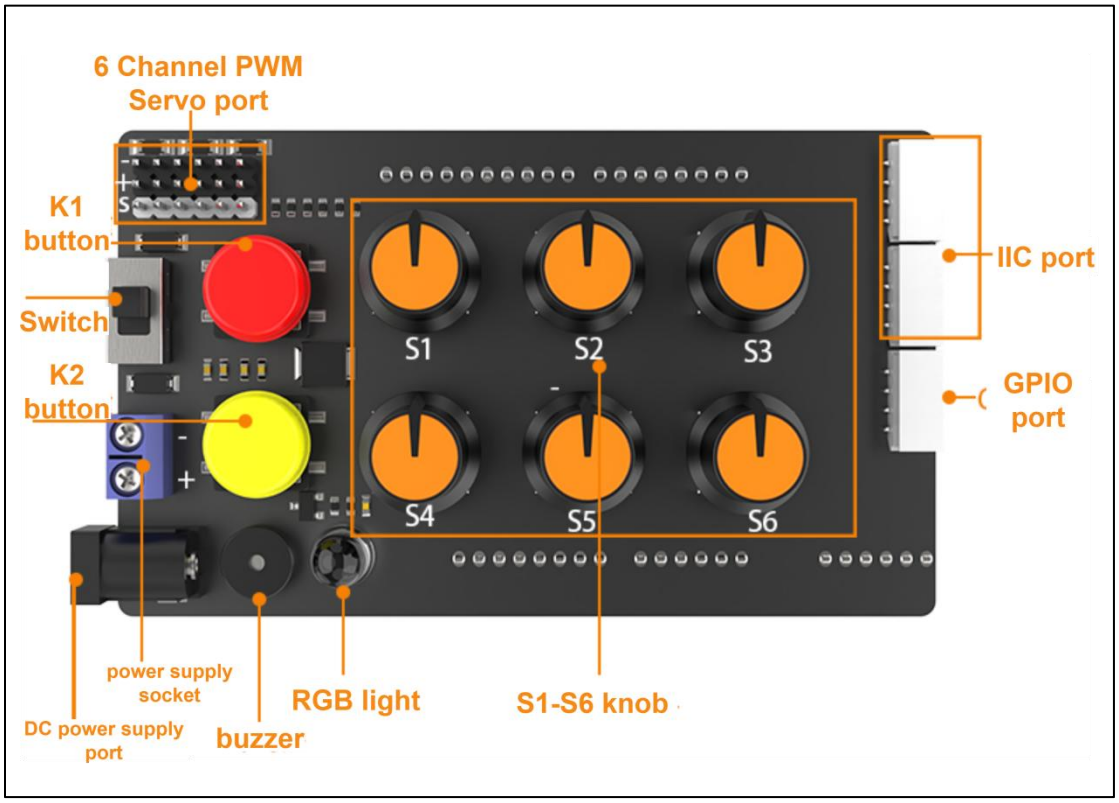

◆ **Port Instruction**

Port	Port Instruction
DC Power Port	Insert the DC port of the battery with a supply voltage 6~8.4V.
Power supply	Supply voltage 6~8.4V. Do not used with the DC power interface simultaneously.
K1 Button	Edit action group refer to “1. Tutorials\2. Action Editing\2.1 Offline Knob Programming”.

Switch	Power switch
K2 Button	Run action group refer to“1. Tutorials\2. Action Editing\2.1 Offline Knob Programming”.
6-Channel PWM Servo Port	Connect PWM servo on the arm
S1~S5 Knob	Control PWM servo rotation of 1~5 ports
Buzzer	Used as a function switch prompt
RGB light	Function can be indicated by emitting corresponding color of light
I2C Port	Secondary development port Ultrasonic and accelerometer sensors are supported to connect
GPIO Port	Secondary development port Touch sensor are supported to connect

4.3 Bluetooth Module

Connect to app via Bluetooth module and then control the robot arm directly.

The connection instruction is as follows:

◆ **Connection Instruction**

Align the pins on the expansion board with the socket connectors on the UNO board at first, then insert them into the UNO board one by one.

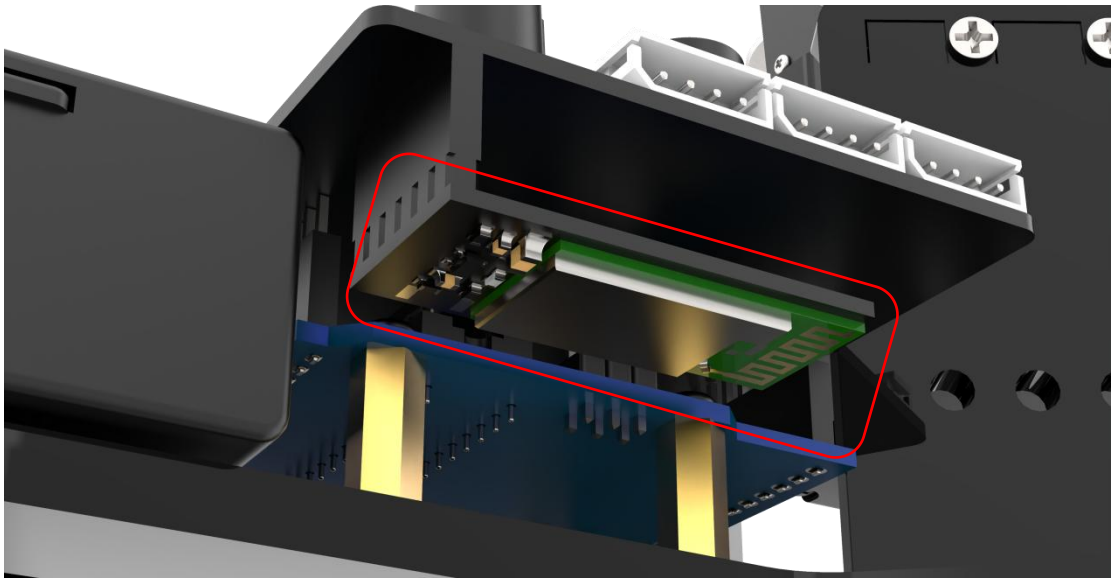

4.4 LFD-01M Servo

MiniArm uses LFD-01M servo for servos No.1 to No.3, connected to the PWM servo NO.1~3 interfaces respectively and controlled using knobs S1~S3.

◆ **PIN Instruction**

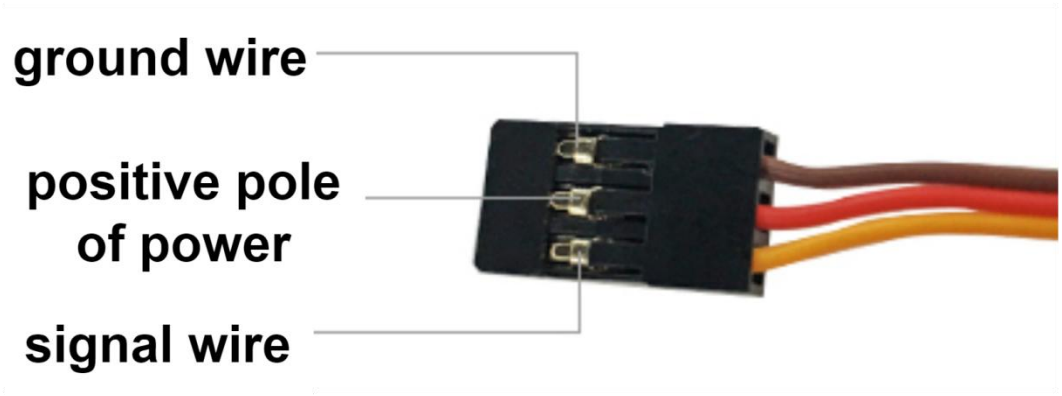

PIN	PIN Instruction
Yellow Wiring	Signal Wire
Red Wiring	Positive Terminal of Power
Brown Wiring	Ground Wire

◆ **Parameter Instruction**

Parameter	Specification
Working Voltage	4.8~6V DC
Control Method	PWM Pulse-width Control
Control Angle Range	500~2500us correspond to 0~180°

4.5 LDX-218 Servo

Servo No.4 is LDX-218, connected to PWM servo No.4 interface and controlled using knob S4.

◆ **PIN Instruction**

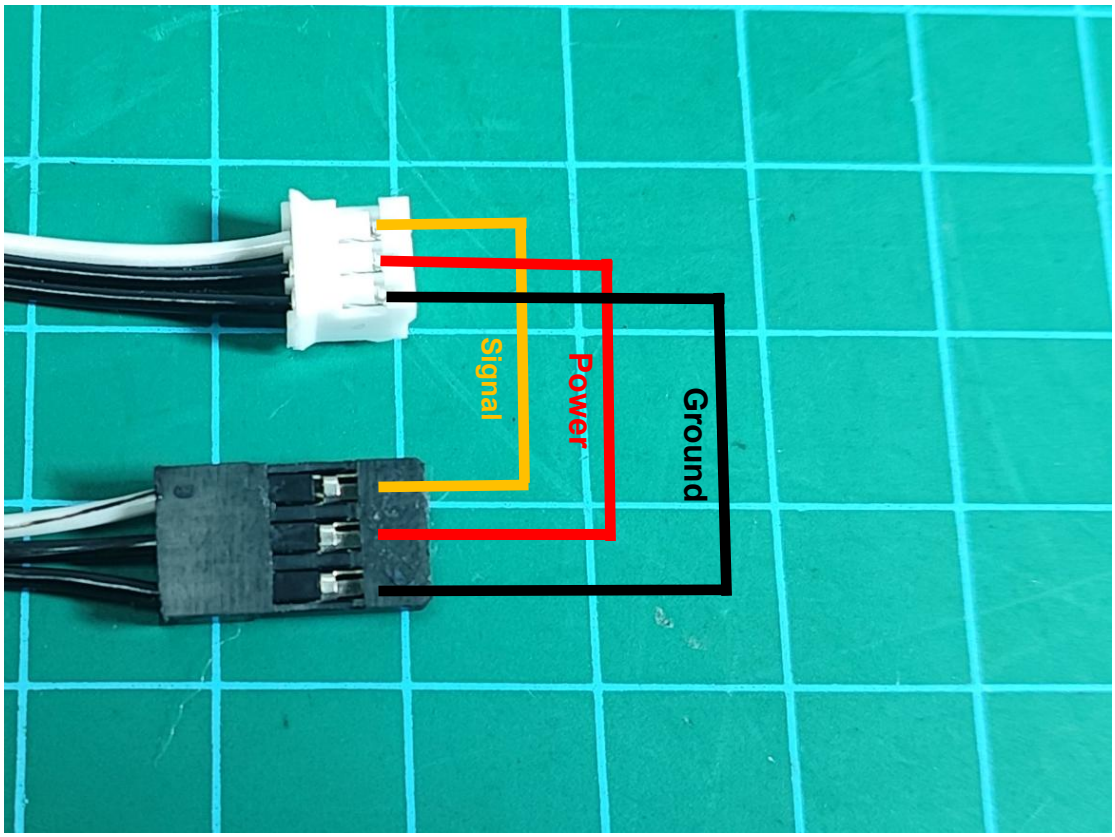

PIN	PIN Instruction
White Wiring	**Signal Wire**
Black Wiring (middle)	**Positive Terminal of Power**
Black Wiring (edge)	**Ground Wire**

◆ **Parameter Instruction**

Parameter	Specification
Working Voltage	5-7.4V
Control Method	PWM Pulse-width Control
Control Angle Range	500~2500us correspond to 0~180°

4.6 LD-1501MG Servo

Pan-tilt servo No.5 is LD-1501MG servo, connected to PWM servo No.5 port and controlled using S5 knob.

◆ **PIN Instruction**

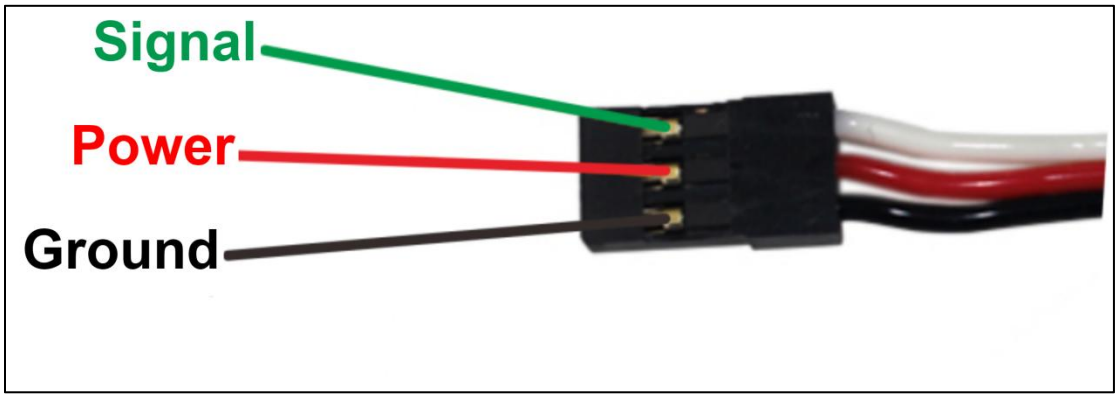

PIN	PIN Instruction
White Wiring	Signal Wire
Red Wiring	Positive Terminal of Power
Black Wiring	Ground Wire

◆ **Parameter Instruction**

Parameter	Specification
Working Voltage	4.8~6V DC
Control Method	PWM Pulse-width Control
Control Angle Range	500~2500us correspond to 0~180°

5. Tutorial Overview

Step 1: assemble the robotic arm and learn the basic operation of the arm.

In this unit, you will have a brief understanding of robotic arm structure and learn how to assemble, charge,use knobs and keys to control arm basically. You can proceed to sequentially study the contents in the “1. Tutorials\1. Getting Ready” directory.

Step 2: learn how to use the knobs to edit action group.

You can learn how to edit action group of the robotic arm in the “1. Tutorials\2. Action Editing” directory. The action group execution can be controlled using buttons after finishing editing.

Step 3: unlock app control.

You can learn how to use the app to control each joint of arm to rotate in the “1. Tutorials\3. Remote Control Course” course directory.

Step 4: preparation for secondary development.

You can setup the environment of secondary development such as Arduino development environment, and connect the sensor module to the robot arm in the “1.Tutorials\4. Secondary Development Preparation” course directory.

Step 5: learn the secondary development course.

In the “Tutorials\5. Secondary Development Course” course directory, you will learn about secondary development of robot arm. Work with sensors such as ultrasonic, color, touch to make your robot arm more vivid and fun.